GrazeFall 2" Baffled Wall Grazer (55mm)

Formerly 811DB and 812 - FH, PH and IH
Recessed Narrow Aperture Linear Wall Grazer

specialty lighting industries

The GrazeFall Family

GrazeFall is our family of professional grade linear wall grazers designed to highlight feature materials and walls, revealing texture through the contrast of light and shadow. This high performance 2" (55mm) continuous low glare baffled wall grazer is intended for walls up to 15 feet in height and can be installed in the ceiling or the floor as an uplight grazer. The continuous system can be specified to custom lengths at 6" increments with the option of flush or regressed baffle positions and a choices of flanged or flangeless trims in the ceilings. The narrow profile fixture is ideally suited to highlight the texture in surfaces such as stucco or brick, illuminate flat surfaces such as venetian plaster, wood, or specular surfaces such as polished stone or stainless steel. The 2" GrazeFall family has additional product offerings, including lensed fixtures and wall mounted surface fixtures.

PROJECT: | TYPE:

SPECIFIER: | DATE:

2" Recess Mt- (Flush Baffle)

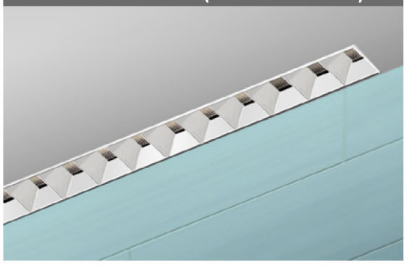

2" Recess Mt- (Regress Baffle)

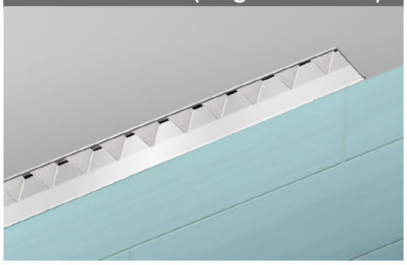

Key Points (GZ2B-RM)

Trim

- Flange or Flangeless.
- 15 flange color options + custom/RAL# available.
- Black or White baffle color options (Clear is available as a special request but not recommended for grazing appliation due to beam artifacts).
- Shower Trim is fully sealed and gasketed.
- Sealed walk-over lens for interior up-light applications.

Source Optics

- Up to 345 lm/ft available in static white.
- 90+ CRI and 60+ R9 for static white.
- CCT offerings - 2700k, 3000k, 3500k and 4000k.
- Dynamic tunable white in two ranges: 1800-4000k and 2700-6500k.
- RGBW availble with DMX control.
- Veiling Acrylic lens standard - other lens types available

Housing

- Inside and outside "L" configurations are available for corners and wrap arounds.
- Recessed ceiling or floor mounting.
- Damp listed - Wet listed with Shower Trim or IH (up-light) housing
- 2" specification increments (Integral Driver requires minimum of 2').
- Spring loaded snap in / snap out light engine for simple service.

Driver And Control

- 1% dimming standard - 0.1% available.
- 0-10v, DALI, Lutron Ecosystem, EldoLED and DMX options available.
- Flicker Free to IEEE 1789-2015.
- Universal 120v to 277v.

Aperture Options

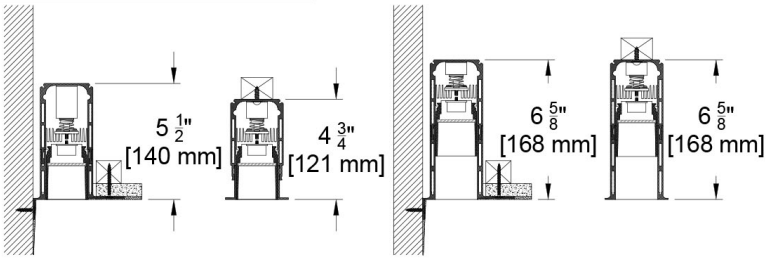

Wall and/or Ceiling Mount shown. Floor Mount available

Aperture and Mounting Options

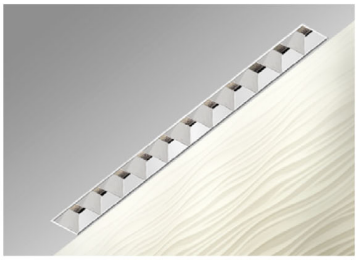

Flush Baffle Recessed (FB)
Formerly 811DB-LED-PH / FH

Flush Baffle Up Light (FL)
Formerly 811-LED-IH

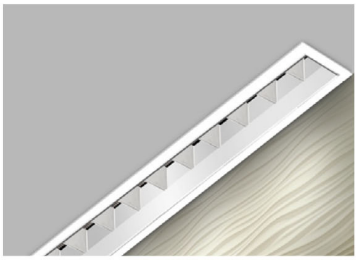

Regress Baffle (RB))
Formerly 812-LED-PH / FH

Specialty LINEAR Beamspreads			18° x 50°				Asymetric ISO CD Plot		
Lens Type	Source	System watts (W/ft)	Delivered Lumens (Lm/ft)	Lumens/ Watt	Peak CD	10% Field	18° across width x 50° along run	CCT Multiplier	
Flush Baffle (BF)	SNL8	8	269	32	780	54°	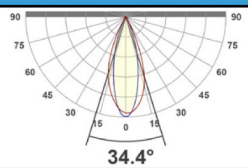	2700	0.9
	SNL11	11	345	30	1008	54°		3000	1.00
Regress Baffle (RB)	SNL8	8	230	27	785	47°		3500	1.00
	SNL11	11	306	27	1042	47°			

All measurements delivered or derived delivered lumens at 3000K with black baffles. Values are per foot. ISO CD plot based on FB (Flush Baffle)

© 2026 Specialty Lighting Industries
These specifications are subject to change without notice.

Specialty Lighting Industries
1306 Doris Ave., Ocean, NJ 07712
Tel. 732.517.0800 | Fax 732.517.0971

specialty lighting industries

Ordering Codes

PROJECT:

SPECIFIER:

DATE:

TYPE:

QUANTITY:

Ordering Code Example: GZ2B-RM-FB-Z-3U-102"-SNL11-30-SY1-P16-B-79A-ST

FIXTURE	APERTURE	TRIM	MOUNTING	LENGTH	LUMENS / WATTS	CCT	DRIVER / CONTROL	HOUSING FINISH	BAFFLE FINISH	LENS ACCESSORIES	ACCESSORIES
GZ2B-RM											
GrazeFall 2" Recessed Linear Baffled Wall Grazer	FB Flush Baffle RB Regressed Baffle	F Flanged Trim Z Flangeless Trim	**Flanged Housings** FH Flanged Housing **Flangeless Housings** IH Up-light always flangeless to be flush with floor 1U 1 sided plaster flange for wall-ceiling mount where fixture has wall on 3 sides 3U 3 sided plaster flange for wall-ceiling mount where fixture has wall on 1 side 4U 4 sided plaster flange for recessed ceiling mount Note - All housings are airtight by design	__ Specify total inches in 2" increments (minimum 24" length with integral driver)	SNL8 8W/ft 269Lm/ft** 90+CRI, 60+R9 Specialty Board* SNL11 11W/ft 345Lm/ft** 90+CRI, 60+R9 Specialty Board* **Tunable** TWSL10 11W/ft 1300Lm/ft (source lumens at mid CCT range) 90+CRI, 60+R9 Specialty Tunable White Board + RGBWSL18 18W/ft 1000Lm/ft (source lumens) 90+CRI, 60+R9 Specialty RGBW Color Tunable Board ++ **Ambient Dim™** A5 ●● 6W 315Lm* 95+CRI, 90+R9 *Supports CA Title 24 when paired with all EldoLED and the Lutron* * Rigid Linear board with 2W capable LEDs, 50mm OC with collimating optic ** Based on Flush Lens Aperture. + Rigid Linear tunable white board with 3.3W capable LEDs, 50mm OC with 30° optic (must specify CCT range and E22 Tunable White) ++ Rigid Linear RGBW color tunable board with 5W capable LEDs, 50mm OC with 30° optic (must specify with DMX driver option) ●●CA Title 24 Compliant to JA8	27 2700K 30 3000K 35 3500K 40 4000K **Tunable** 1840 1800-4000K Tunable White 2765 2700-6500K Tunable White RGBW 1200-8000K Dynamic Color Changing **Ambient Dim™** 3019 3000-1900K 2722 2700-2200K	SY1 0-10V 1.0%, UNV (120-277V) linear SY2 0-10V 1.0%, UNV (120-277V) log LD Digital Ecosystem* 1.0%, UNV (120-277V) ECO Hi-Lume SoftOn/Fade-to-Black LDE1 E1 0-10V 0.1%, UNV (120-277V) log E2 DALI-2 0.1%, UNV (120-277V) log E3 0-10V 0.1%, UNV (120-277V) linear E4 * DMX 0.1%, UNV (120-277V) Universal DMX Driver/Controller *RGBWW-DMX (INCLUDES DMX/RDM COMPATIBLE DRIVER WITH BUILT-IN DECODER - CONTROLLER BY OTHERS)* **Tunable** RGBW-DMX DMX 0.1%, UNV (120-277V) Universal DMX Driver/Controller	W White Paint B Black Paint PXX Specialty Paint Color* P01-P15 C Custom/RAL* FINISH GUIDE LINK	W White - as molded B Black as molded	**Aperture Lens** 79A Veiling Acrylic 91A Solite **Walk Over Lens** CP84 Residential Clear SP84 Frosted Note: Use walk over lens selections with IH - up-light housing	CP Chicago Plenum BABA BABA Compliant BABA Products CA Casambi Wireless BLE to be paired with driver ST Shower Trim IS9X Inside 90° Corner* OS9X Outside 90° Corner* **Controls** LR Lutron Wireless RF PowPak ATH Lutron Athena Wireless Node *Must be used with E2 driver* *X=specify number of corners

© 2026 Specialty Lighting Industries
These specifications are subject to change without notice.
Specialty Lighting Industries
1306 Doris Ave., Ocean, NJ 07712
Tel. 732.517.0800 | Fax 732.517.0971

Ceiling Cutouts and Dimensions

To achieve best results, Specialty recommends to mount the fixture as close to the wall as possible. All drawings show closest possible mounting condition. Ceiling blocking is required and shown with a "X" in a box as a reference. Blocking will vary based on construction conditions and should be detailed on submittal drawings to define construction method and final wall offsets.

GZ2B- Flanged Recessed Mount Flush Baffle

(GZ2B-RM-FB-F-FH)

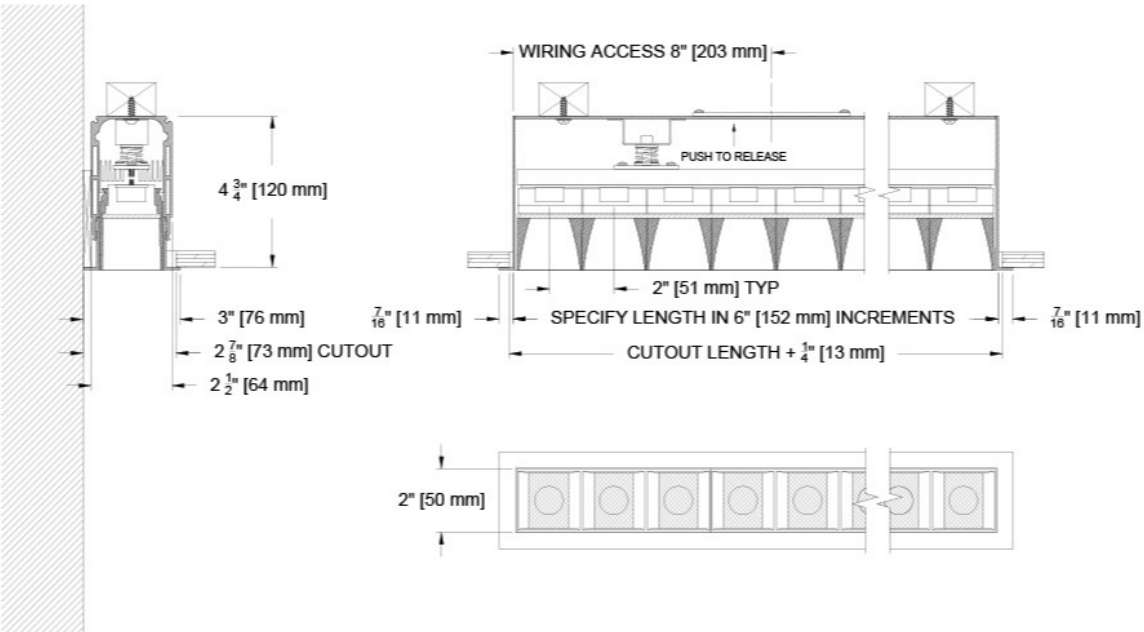

GZ2B- Flanged Recessed Mount Regressed Baffle

(GZ2B-RM-RB-F-FH)

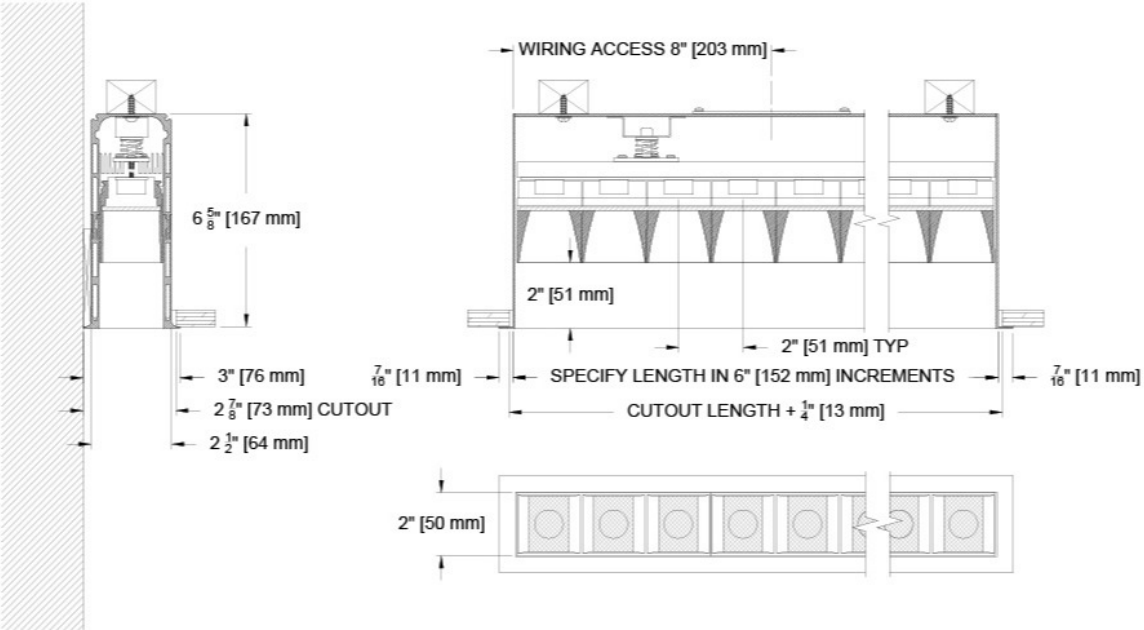

© 2026 Specialty Lighting Industries
These specifications are subject to change without notice.
Specialty Lighting Industries
1306 Doris Ave., Ocean, NJ 07712
Tel. 732.517.0800 | Fax 732.517.0971

Ceiling Cutouts and Dimensions

GZ2B- Regress Baffle 3 Sided Plaster Flange with Wall Mount RB-3U

(GZ2B-RM-RB-Z-3U-)

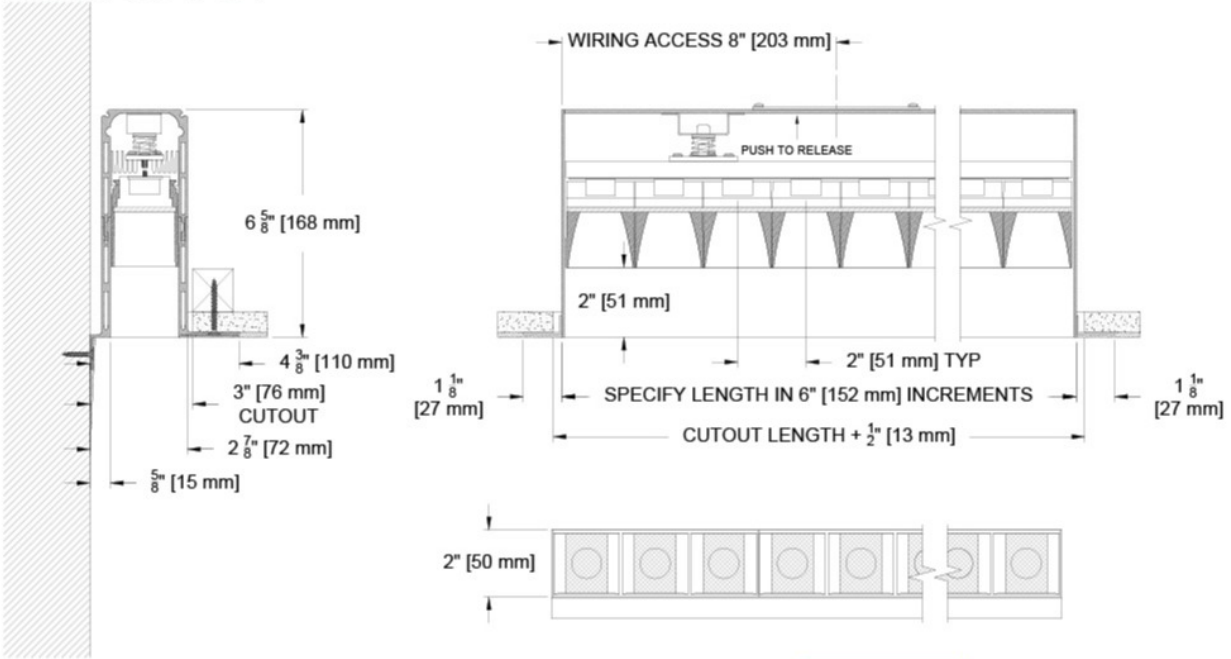

GZ2B- Regress Baffle 4 Sided Plaster Flange RB-4U

(GZ2B-RM-RB-Z-4U-)

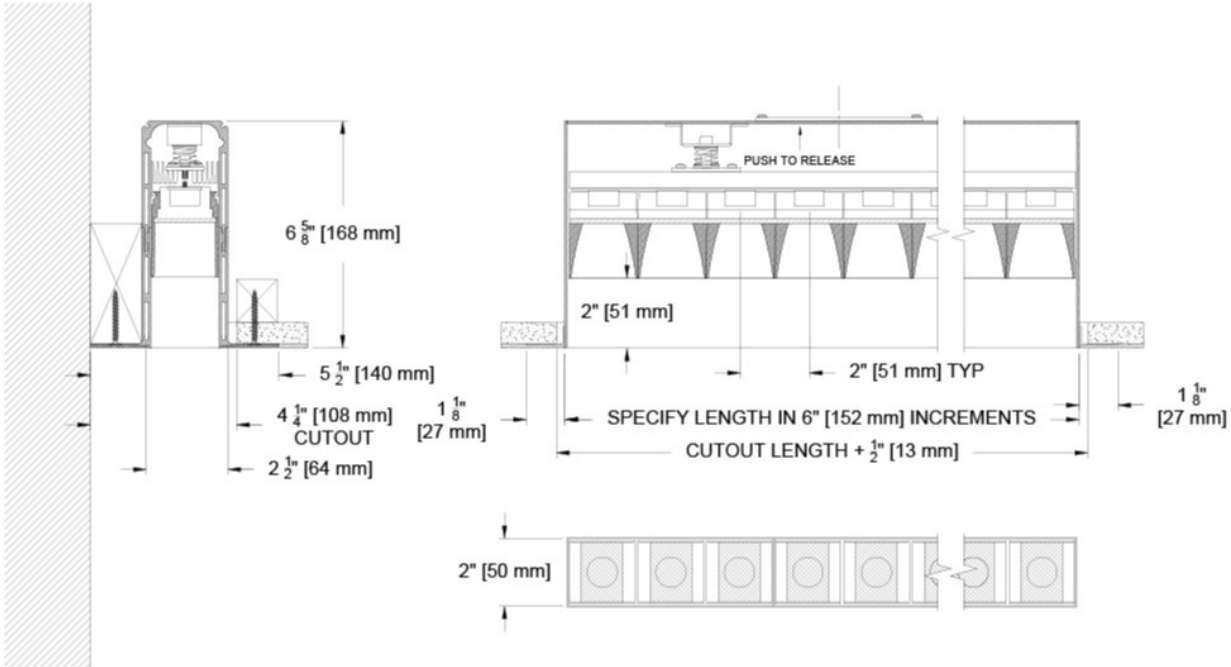

© 2026 Specialty Lighting Industries
These specifications are subject to change without notice.
Specialty Lighting Industries
1306 Doris Ave., Ocean, NJ 07712
Tel. 732.517.0800 | Fax 732.517.0971

Ceiling Cutouts and Dimensions

GZ2B- Flush Baffle 3 Sided Plaster Flange with Wall Mount FB-3U

(GZ2B-RM-FB-Z-3U-)

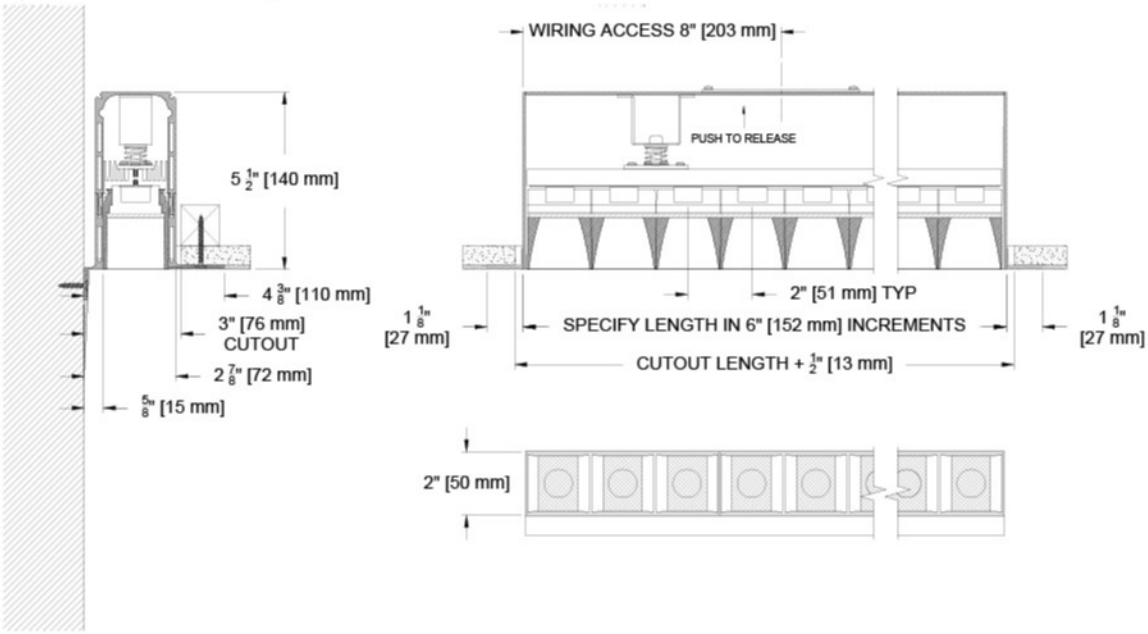

GZ2B- Flush Baffle 4 Sided Plaster Flange FB-4U

(GZ2B-RM-FB-Z-4U-)

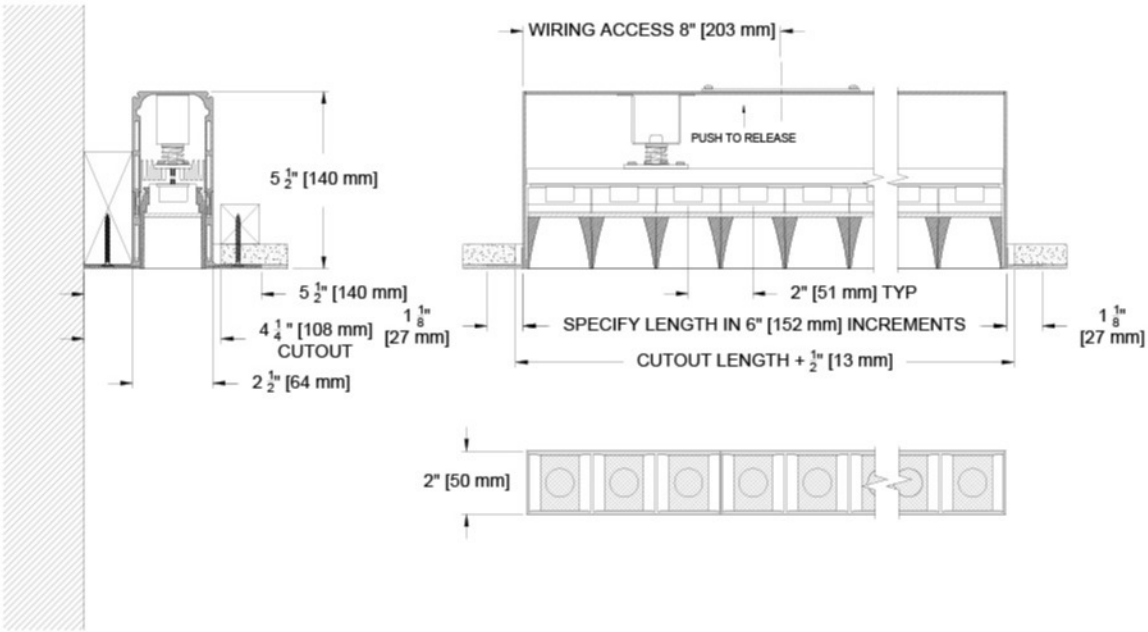

© 2026 Specialty Lighting Industries
These specifications are subject to change without notice.
Specialty Lighting Industries
1306 Doris Ave., Ocean, NJ 07712
Tel. 732.517.0800 | Fax 732.517.0971

Ceiling Cutouts and Dimensions

GZ2B- Flush Baffle In Floor Housing — FB-IH

(GZ2B-RM-FB-Z-IH-)

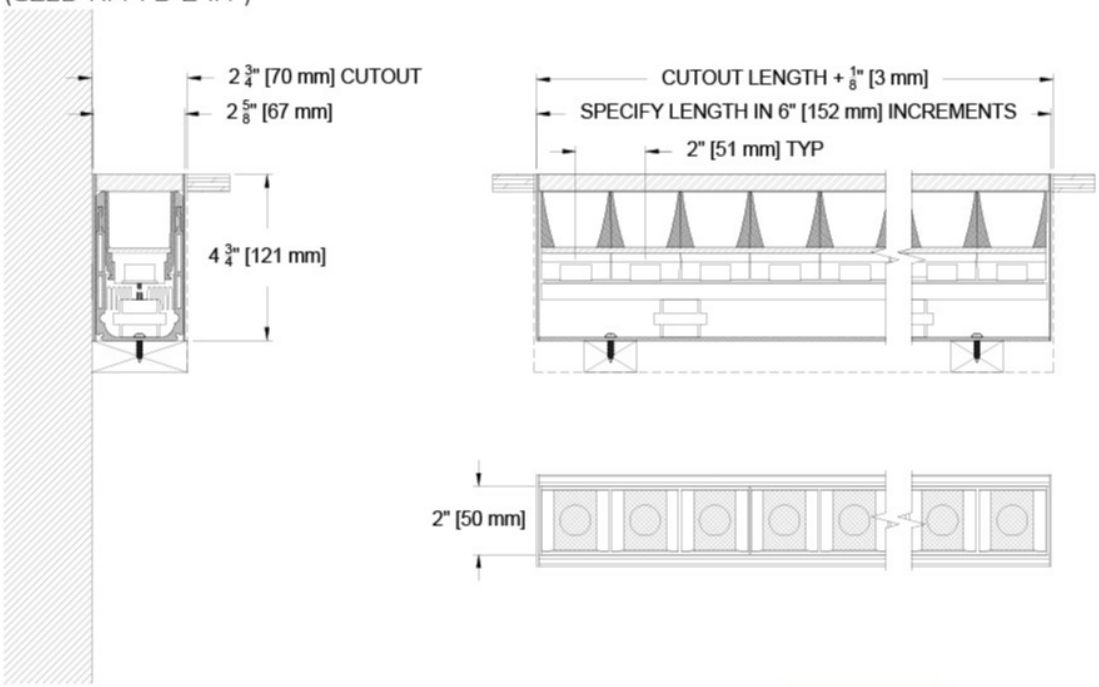

GZ2B- Regress Baffle In Floor Housing — RB-IH

(GZ2B-RM-RB-Z-IH-)

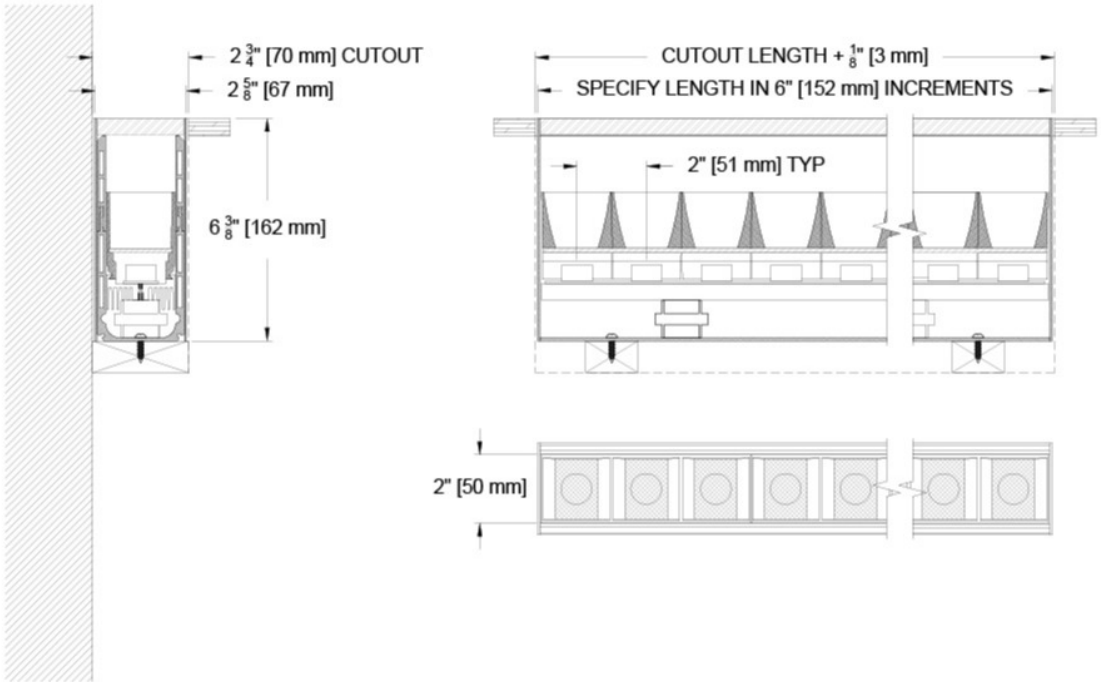

© 2026 Specialty Lighting Industries
These specifications are subject to change without notice.
Specialty Lighting Industries
1306 Doris Ave., Ocean, NJ 07712
Tel. 732.517.0800 | Fax 732.517.0971

Photometric Table

All data is based from goniometer measurements of production representative product. All lumen values are delivered or derived and can vary +/- 10% from LED manufacturer rated flux range. Measurements at 3000 CCT with black baffle. All photometry is used with a veiling acrylic (79A) lens. Other lens selections will modify the lumen output and exact beam spread. If photometry is required with a specific lens treatment contact your regional sales manager for a special measurement.

Specialty LINEAR Beamspreads			18° x 50°				Asymetric ISO CD Plot		
Lens Type	Source	System watts (W)	Delivered Lumens (lm)	Lumens/ Watt	Peak CD	10% Field	18° across width x 50° along run	CCT Multiplier	
Flush Baffle (BF)	SNL8	8	269	32	780	54°	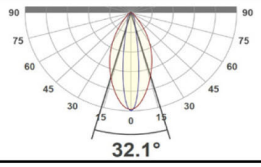	2700	0.9
	SNL11	11	345	30	1008	54°		3000	1.00
Regress Baffle (RB)	SNL8	8	230	27	785	47°		3500	1.00
	SNL11	11	306	27	1042	47°			

© 2026 Specialty Lighting Industries
These specifications are subject to change without notice.
Specialty Lighting Industries
1306 Doris Ave., Ocean, NJ 07712
Tel. 732.517.0800 | Fax 732.517.0971

Color Data

All data is based from goniometer measurements of production representative product. All lumen values can vary +/- 10% from LED manufacturer rated data range. Measurements at 3000 CCT unless otherwise noted.

SNL8 / SNL11

Specialty Linear Board

- <3 MacAdam Ellipse (<3 SDCM)
- 90+ CRI and RF
- 60+R9, Hue Bin 1 and 16

94 CRI	72 R9
92 RF	102 RG

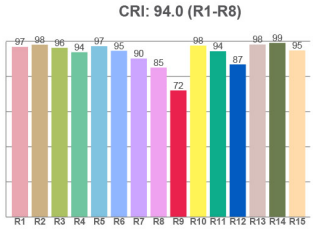

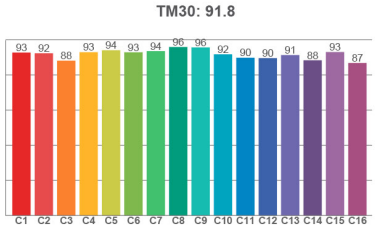

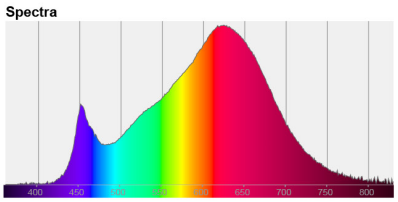

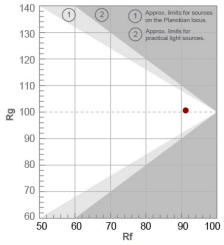

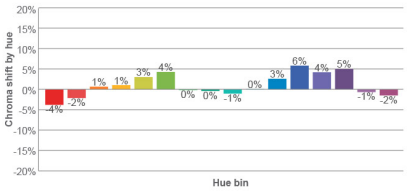

© 2026 Specialty Lighting Industries
These specifications are subject to change without notice.
Specialty Lighting Industries
1306 Doris Ave., Ocean, NJ 07712
Tel. 732.517.0800 | Fax 732.517.0971